Electronic Devices

MIG - Pulse Encoder

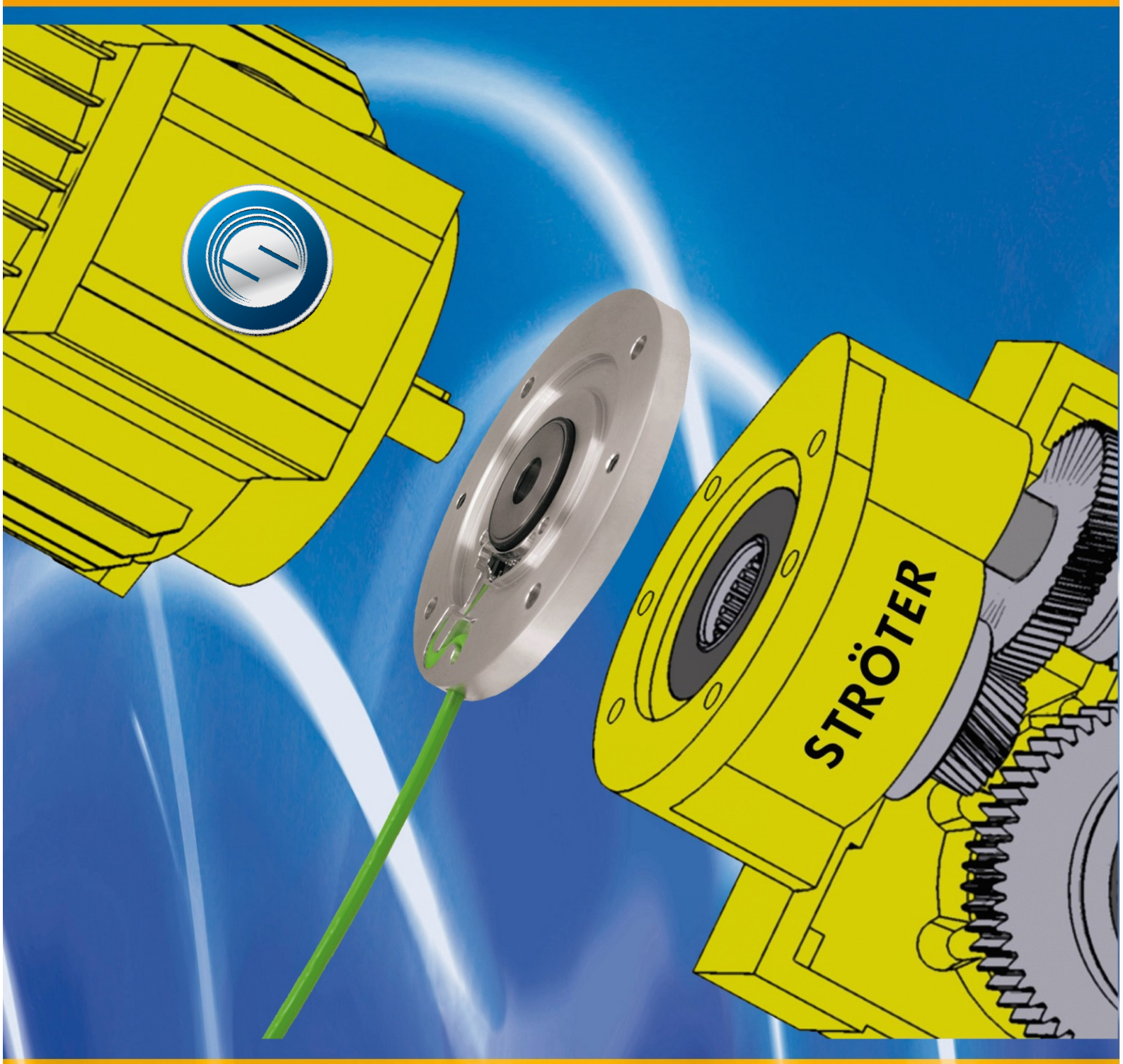

MIG - Pulse Encoder

STRÖTER Antriebstechnik GmbH

D-40549 Düsseldorf - Krefelder Str. 117
Telefon +49 211/95 60 0-0 - Fax +49 211/50 44 15
E-Mail: service@stroeter.com - Internet: www.stroeter.com

Electronic Devices

A typical day in the life of a pulse encoder

… and with the pulse encoder type MIG from STRÖTER

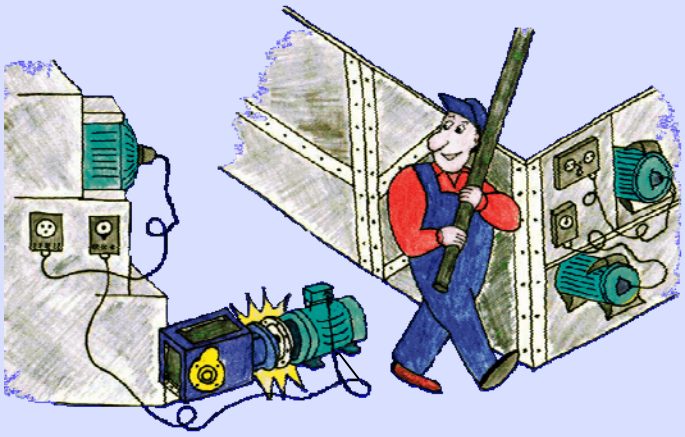

Enclosed assembly MIG pulse encoder

- 1 to 2048 Impulses
- Flange thickness from 7—12mm according to motor size
- No exposed electrical components
- Protected and space saving assembly between motor and Machine or gear flange
- Possible motor speed up to 6000 min^{-1}
- HTL- (10-24 VDC) and TTL- (5VDC) Versions
- Diameter from 80 to 350 mm for all IEC-Flange motors available
- Aluminum and stainless steel flange pulse encoder
- Simple and economical replacement of existing drives
- Special forms available on request

STRÖTER Antriebstechnik GmbH

D-40549 Düsseldorf – Krefelder Straße 117
Telefon +49 211 9 56 00-0 – Telefax +49 211 50 44 15
E-Mail: service@stroeter.com – Internet: www.stroeter.com

Electronic Devices

Magnetic pulse encoder „ MIG *Nova*$^{+}$ “

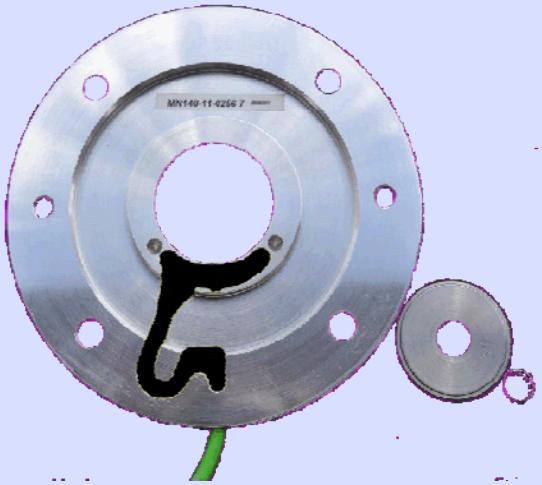

Mechanical values:	
Max. speed	6.000 min^{-1} (1.024 Impulses), 3.000 min^{-1} (2.048 Impulses) Depending on the flange size and number of impulses See table page 5 „possible number of impulses“
Temperature range	-30°C to +80°C
Flange / hub material	Aluminum, stainless steel (additional price) / Magnet vulkanized
Connection cable	PUR-sheath 6 x 0,14 screened (A+B , A+B inv.)
Cable length	Depending on the impulses and RPM: max. 100 m at 5V DC max. 20 m at 24 V DC max. 50 m at 24 V DC und Impulse frequency max. 50 KHz
Protection type	Standard IP 40, depending on the sealant used between motor and machine flange IP67. Please take note in the operating manual.

Electrical values:	
Connecting voltage U_B	5 to 24 VDC
Max. Impulse frequency	≤100 kHz
Output signals	Square wave-Impulses, A 90° B and A 90°B inverted
Impulses / Rotation	See table page 5 „possible number of Impulses“
Signal level	$U_{high} \geq U_B$ -0,7V at $L_{Last} \leq$ 10 mA $U_{low} \leq$ 0,7V at $I_{last} \leq$ 10mA
Output capacities	≤ 30 mA at U_b = 10 V DC or ≤ 20 mA at U_b = 24 V DC
Output switching	Line-Driver (Push-Pull)
External evaluation	NPN, PNP, RS 422
Reverse polarity protected	yes
Short circuit protection at the out-put	yes
Motor shaft tolerance	0,2 mm axial 0,05 mm radial

EMV– test according to EN 55011(Emission) and EN 61326-1 (Immunity)

STRÖTER Antriebstechnik GmbH
D-40549 Düsseldorf – Krefelder Straße 117
Telefon +49 211 9 56 00-0 – Telefax +49 211 50 44 15
E-Mail: service@stroeter.com – Internet: www.stroeter.com

Electronic Devices

Magnetic pulse encoder „ MIG *Nova*$^{+}$ “

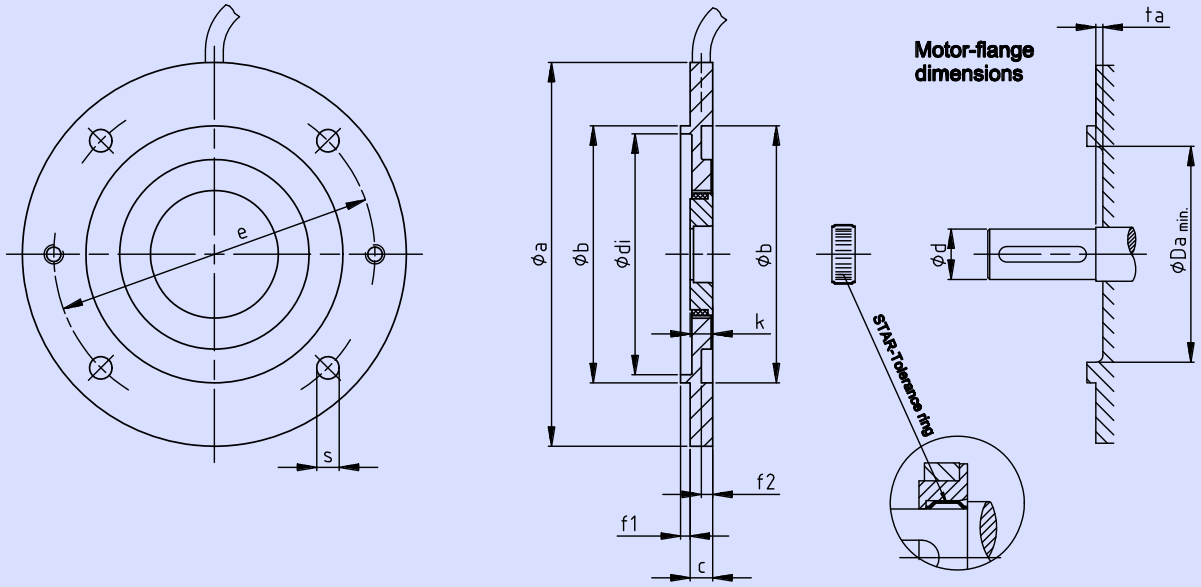

Dimensions									Standard motor sizes (BG) according to IEC				
MIG *Nova*$^{+}$ Øa	Øb	c	Ødi	Øe	f1	f2	k	s	BG	Flange	Ød x length	ta	øDa
80	50	7	44	65	2,5	3	7	5,8	56	FT 65	Ø 9 x 20	2	43
90	60	7	54	75	2,5	3	7	5,8	63	FT 75	Ø11 x 23	2	43
105	70	7	64	85	2,5	3	7	7	56	FT 85	Ø 9 x 20	2	60
									71	FT 85	Ø14 x 30	2	60
120	80	7	74	100	3	3,5	7	7	56	FF 100	Ø 9 x 20	2	60
									63	FT 100	Ø11 x 23	2	60
									80	FT 100	Ø19 x 40	2	60
140	95	7	85	115	3,5	4	7	9	63	FF 115	Ø11 x 23	2	60
									71	FT 115	Ø14 x 30	2	60
		9	85	115	3,5	4	9	9	90	FT 115	Ø24 x 50	3	60
160	110	7	100	130	3,5	4	7	9	71	FF 130	Ø14 x 30	2	60
									80	FT 130	Ø19 x 40	2	60
		9	100	130	3,5	4	9	9	90	FT 130	Ø24 x 50	3	60
									100	FT 130	Ø28 x 60	3	105
									112	FT 130	Ø28 x 60	3	105
200	130	9	120	165	3,5	4	9	11	80	FF 165	Ø19 x 40	2	60
									90	FF 165	Ø24 x 50	3	60
									100	FT 165	Ø28 x 60	3	60
									112	FT 165	Ø28 x 60	3	105
		12	120	165	3,5	4	12	11	132	FT 215	Ø38 x 80	3	105
250	180	12	170	215	4	5	12	13,5	100	FF 215	Ø28 x 60	3	60
									112	FF 215	Ø28 x 60	3	60
									132	FT 215	Ø38 x 80	3	105
300	230	12	218	265	4	5	12	13,5	132	FF 265	Ø38 x 80	3	105
350	250	12	238	300	5	6	12	17	160	FF 300	Ø42 x 110	3	105
									180	FF 300	Ø48 x 110	3	105

STRÖTER Antriebstechnik GmbH
D-40549 Düsseldorf – Krefelder Straße 117
Telefon +49 211 9 56 00-0 – Telefax +49 211 50 44 15
E-Mail: service@stroeter.com – Internet: www.stroeter.com

Electronic Devices

Magnetic pulse encoder „ MIG *Nova*$^{+}$ “

MIG *Nova*$^{+}$	Flange thick-ness	Magnet Ø	IEC size	Shaft Ø d x l	Impulses								
					1	2	3	4	5	6	7 ...	1024*	2048*
80	7	Ø 19,7	56	Ø 9 x 20	X	X	X	X	X	X	X	X	X
90	7		63	Ø 11x 23	X	X	X	X	X	X	X	X	X
105	7	Ø 39,1	56	Ø 9 x 20		X	X	X	X	X	X	X	X
			71	Ø 14 x 30		X	X	X	X	X	X	X	X
120	7		56	Ø 9 x 20		X	X	X	X	X	X	X	X
			63	Ø 11 x 23		X	X	X	X	X	X	X	X
			80	Ø 19 x 40		X	X	X	X	X	X	X	X
140	7		63	Ø 11 x 23		X	X	X	X	X	X	X	X
			71	Ø 14 x 30		X	X	X	X	X	X	X	X
140	9	Ø 39,1	90	Ø 24 x 50		X	X	X	X	X	X	X	X
160	7		71	Ø 14 x 30		X	X	X	X	X	X	X	X
			80	Ø 19 x 40		X	X	X	X	X	X	X	X
160	9		90	Ø 24 x 50		X	X	X	X	X	X	X	X
			100	Ø 28 x 60		X	X	X	X	X	X	X	X
			112	Ø 28 x 60		X	X	X	X	X	X	X	X
200	9		80	Ø 19 x 40		X	X	X	X	X	X	X	X
			90	Ø 24 x 50		X	X	X	X	X	X	X	X
			100	Ø 28 x 60		X	X	X	X	X	X	X	X
			112	Ø 28 x 60		X	X	X	X	X	X	X	X
200	12	Ø 79,9	132	Ø 38 x 80				X	X	X	X	X	X
250	12	Ø 39,1	100	Ø 28 x 60		X	X	X	X	X	X	X	X
			112	Ø 28 x 60		X	X	X	X	X	X	X	X
250	12	Ø 79,9	132	Ø 38 x 80				X	X	X	X	X	X
300	12		132	Ø 38 x 80				X	X	X	X	X	X
350	12		160	Ø 42 x 110				X	X	X	X	X	X
			180	Ø 48 x 110				X	X	X	X	X	X

* With 1024 Impulses max. speed 6000 min^{-1} , with 2048 Impulses max. speed 3000 min^{-1}

Order example	MN120-14-10247			
MN105	-14	-1024	7	Please specify cable length
Diameter	Shaft	Impulses	Flange thickness	Standard length: 2m Available lengths with additio-nal cost: 5m, 10m, 20m

STRÖTER Antriebstechnik GmbH
D-40549 Düsseldorf – Krefelder Straße 117
Telefon +49 211 9 56 00-0 – Telefax +49 211 50 44 15
E-Mail: service@stroeter.com – Internet: www.stroeter.com

Unser Programm ...

Verstellgetriebe

Kegelradgetriebe

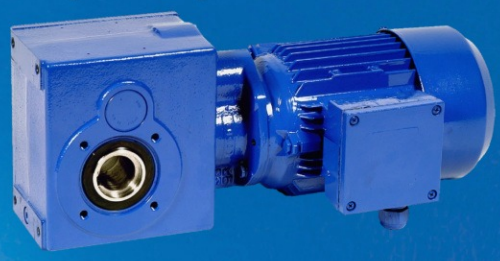

Kegelrad-Verstellgetriebe

Stirnradgetriebe

Schneckengetriebe

MIG Drehimpulsgeber

Torsteuerungen

Frequenzumrichter

z.B. 8-Punkt-Positionierung

STRÖTER Antriebstechnik GmbH

D-40549 Düsseldorf - Krefelder Str. 117
Telefon +49 211/95 60 0-0 - Fax +49 211/50 44 15
E-Mail: service@stroeter.com - Internet: www.stroeter.com